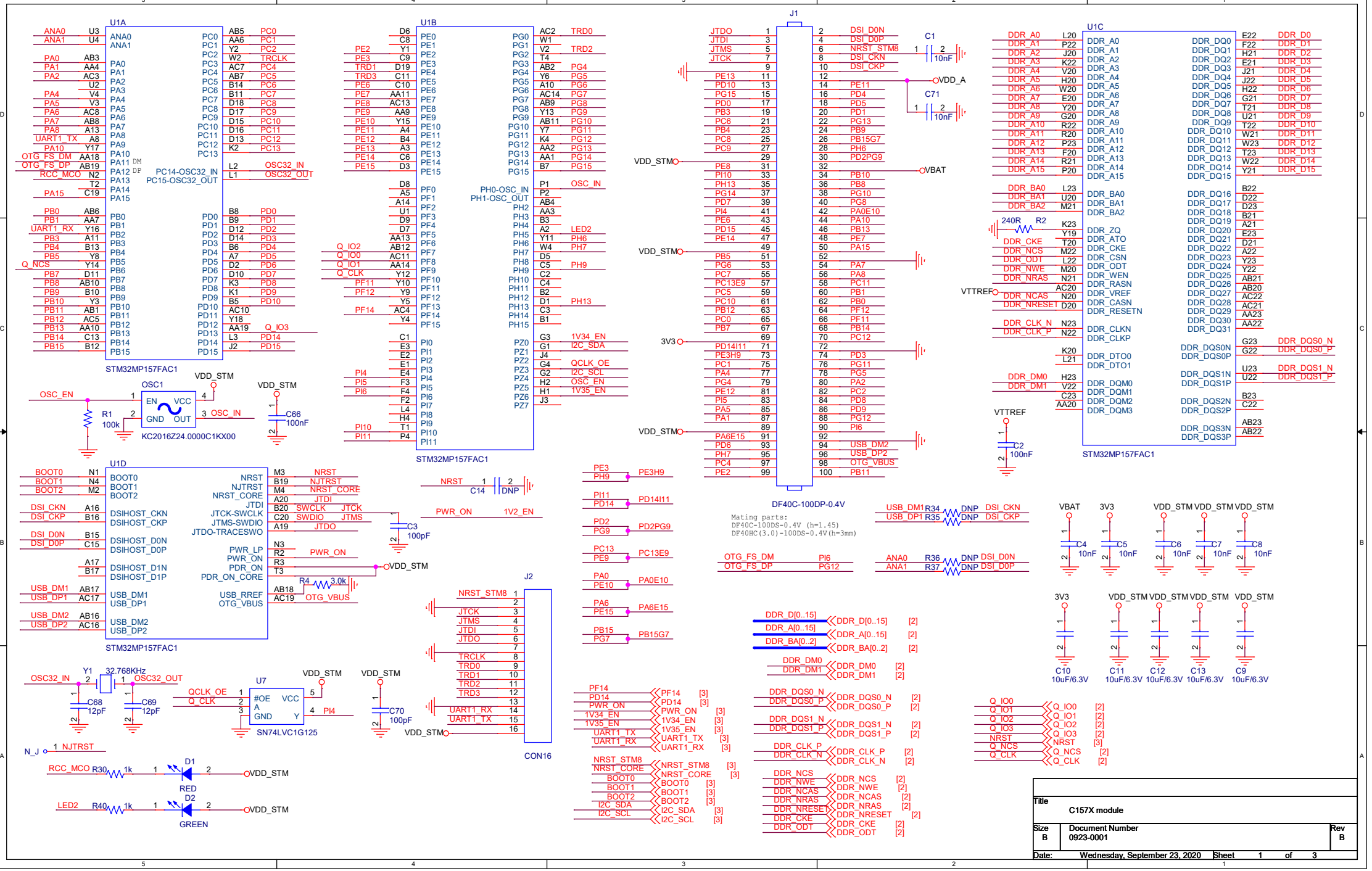
U1A
STM32MP157FAC1
U1B
STM32MP157FAC1
U1C
STM32MP157FAC1
U1D
STM32MP157FAC1
J1
DF40C-100DP-0.4V
Mating parts:
DF40C-100DS-0.4V (h=1.45)
DF40HC(3.0)-100DS-0.4V(h=3mm)
J2
CON16
OSC1
KC2016Z24.0000C1KX00
Y1 32.768KHz
U7
SN74LVC1G125
D1 RED
D2 GREEN
Title
C157X module
Size B
Document Number 0923-0001
Rev B
Date: Wednesday, September 23, 2020
Sheet 1 of 3

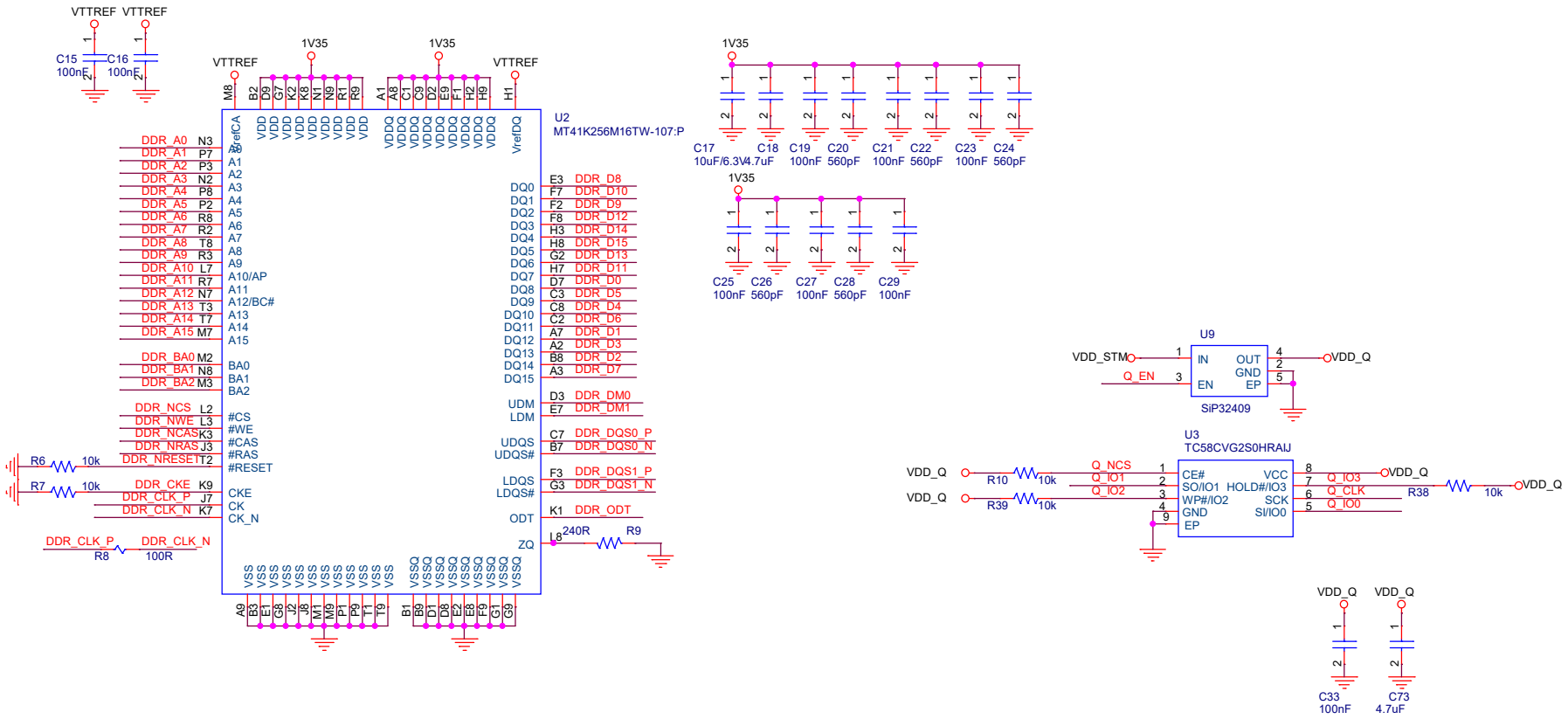

Title	C157X module		
Size B	Document Number 0923-0001		Rev B
Date: Wednesday, September 23, 2020	Sheet 2 of 3		

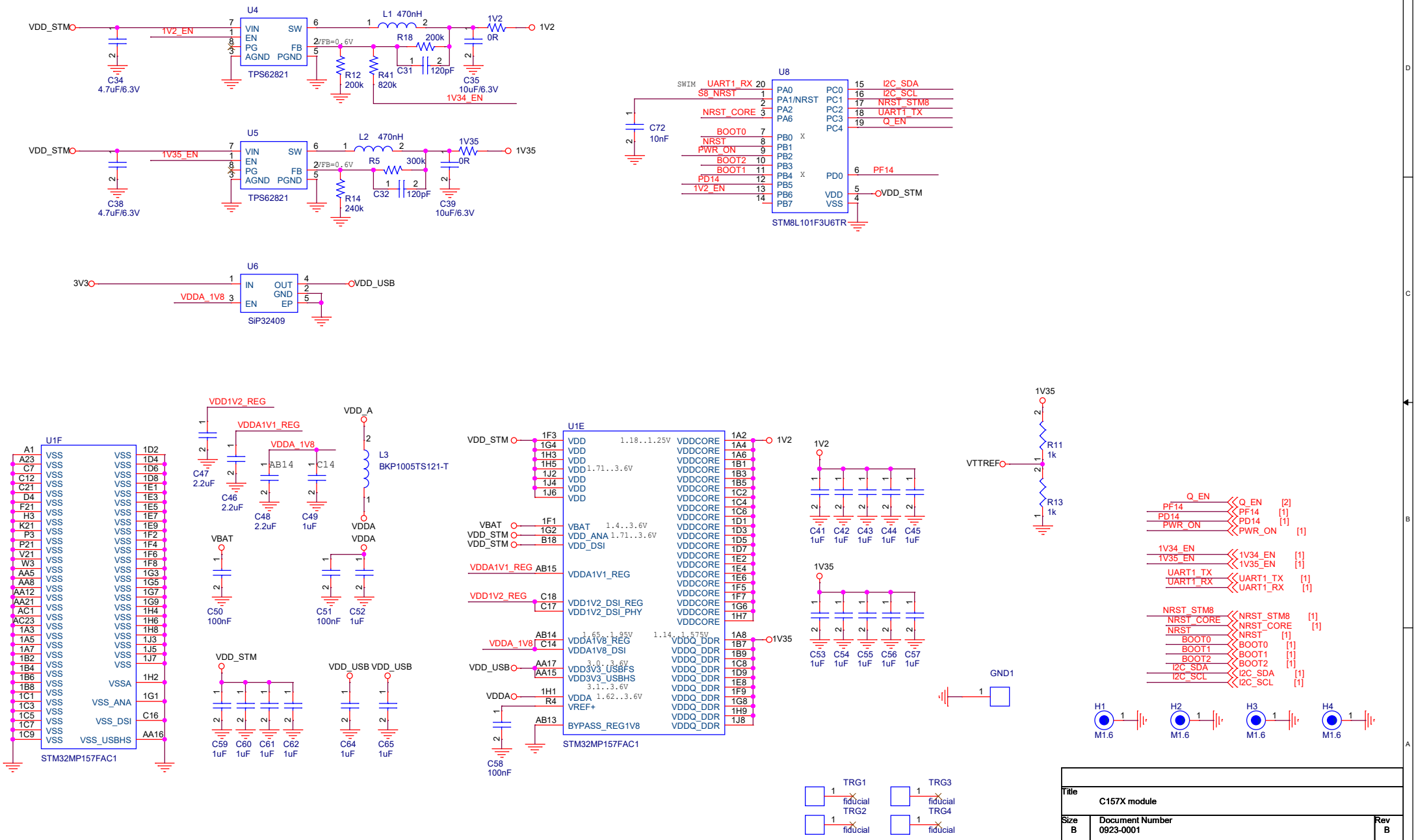

Title	C157X module		
Size B	Document Number 0923-0001		Rev B
Date: Wednesday, September 23, 2020	Sheet 3 of 3		